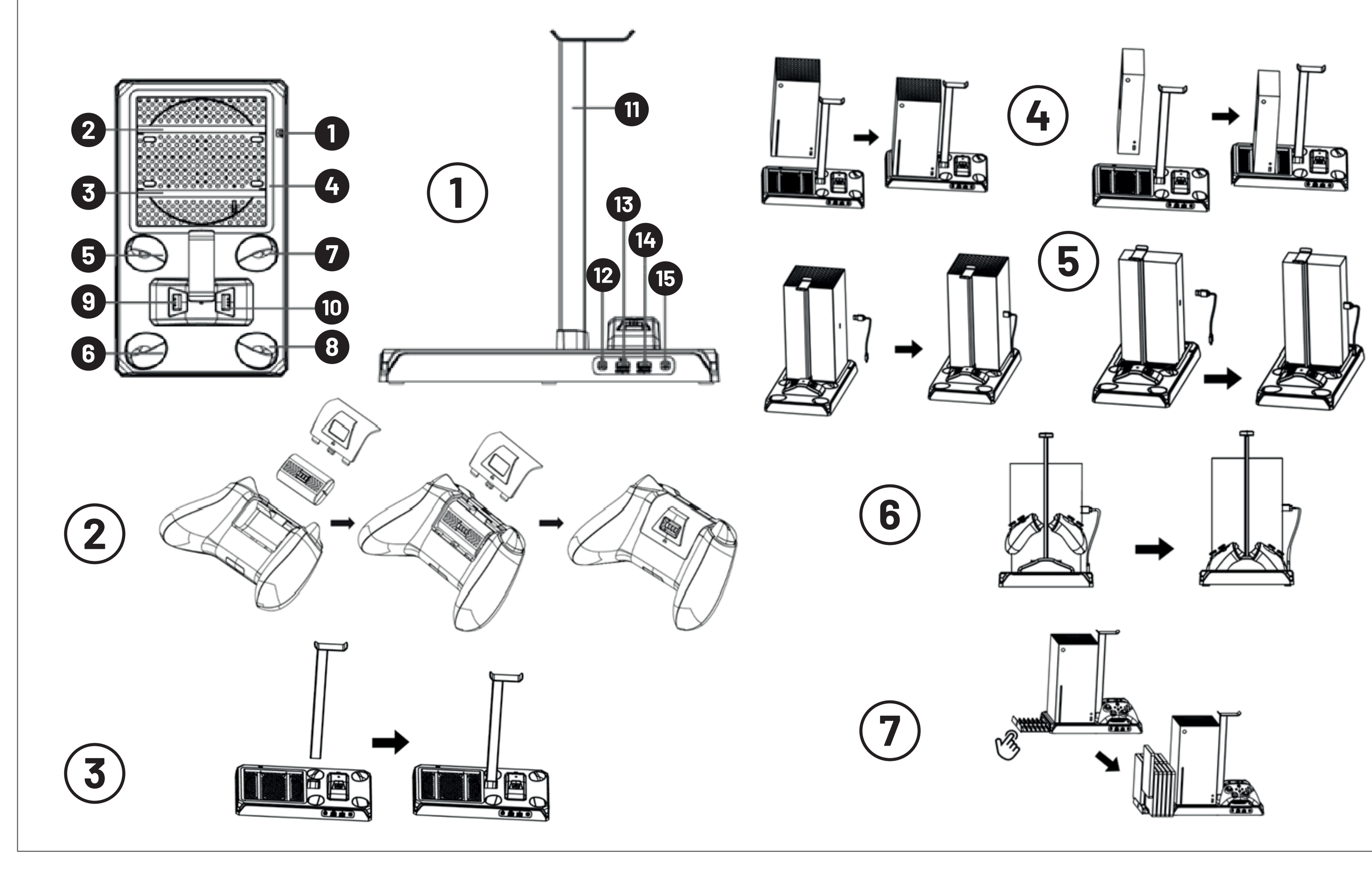

USER MANUAL

EN

Thank you for purchasing the FIXED multifunction station for XBOX consoles. The station has fast charging and triple protection when charging your controllers.

①

1. USB-C input port
2. LED backlight 1
3. LED backlight 2
4. LED backlight 3
5. 6. Charging indication of the first controller
7. 8. Charging indication of the second controller
9. Charging Pins of the first controller
10. Charging Pins of the second driver
11. Additional headphone stand and LED backlight 4
12. Touch control button for fan
13. USB-A port supporting data transfer
14. USB-A port for charging
15. Touch control button for LED backlight

COMPATIBILITY:

For XBOX Series S/X game consoles and game controllers for XBOX One, XBOX Series X/S and XBOX Elite.
Read this manual before use.

INSERTING THE BATTERY INTO THE CONTROLLER: ②

1. Remove the original cover and pencil batteries in the controller.
2. Insert the battery from the station package. The pins on the battery must face outward from the controller.
3. Insert the appropriate cap for your controller from the package. The cap is labeled to indicate which type of controller it is suitable for.
4. This way the controller is ready to use and charge. From the bottom of the controller, you can see the pins in the hole. When attached to the station, they will begin to charge.

USE OF THE STATION:

1. Insert the headphone stand into the prepared hole, when inserted correctly the LED lights up when connected to the power supply. ③
2. Insert an XBOX Series S or X console into the multifunction station. ④
3. Connect the station to the console using a USB-A to USB-C cable. ⑤
4. Insert the controllers into the prepared charging positions (the controllers must have batteries with charging pins). ⑥
5. On the side of the station, where it says „OPEN", a box for up to 12 disc games will slide out when pushed. To slide the box back in, push it inside the station. ⑦

LED INDICATION:

The station is connected to a power source - you can choose from 6 backlight colours using the touch button and the 7th mode is colour blending.
Charging the controller - glows green when the controller is charging
Charging the controller - glows white when the controller is charged
Charging the controller - if the battery is inserted backwards the symbol will go off and charging will not start.

SPECIFICATION OF MULTIFUNCTION STATION

USB-C input: 5V/3A
Controller output: 2x 500mA
USB-A1 port output: 5V/1A
Fan output: 5V/0.22A (max.)
Fan speed: 4000RPM
Weight: 937g
Dimensions: 350x220x66 mm

BATTERY SPECIFICATION

Type: Li-Pol
Capacity: 1400mAh/3.7V
Charging voltage: 3.0V
Charging current: 450 - 500mA
Weight: 30g
Dimensions: 53x28x19mm

PART OF THE PACKAGE:

1x Multifunction station for up to two XBOX controllers
1x Headphone stand
2x Cover for XBOX ONE controller
2x Cover for XBOX Series S/X controller
2x Li-Pol battery
1x USB-A to USB-C cable 20 cm
1x User Manual
1x USB-C to USB-A charging cable

NOTES:

The product is warranted according to the legal regulations in force in the countries where it is sold. In case of service problems, please contact the dealer from whom you purchased the equipment.
FIXED assumes no responsibility for damages caused by improper use of the product.

PRODUCT CARE AND MAINTENANCE

Use a soft cloth to clean the product body.

SECURITY MEASURES

Do not expose the device to rain or snow or immerse it in water.
Do not leave the station in the car in the sun.
Do not expose the device directly to sunlight or leave it near heat sources.
Do not use the station if it has been severely impacted, dropped, or damaged in any way.
Do not disassemble the equipment; there is a risk of electric shock and/or burns.
Do not modify the power cord.
Keep the station out of the reach of children. Unauthorized opening or modification of product parts will void the warranty.
Product storage temperature: 0 to 35 °C
Product operating temperature: 0 to 40 °C

PRODUCT DISPOSAL

(Applicable in countries with separate collection systems for recyclable materials).
Old products must not be disposed of with household waste! If the product no longer works, dispose of it in accordance with the applicable regulations in your country. This ensures that old products are recycled in a professional manner and also eliminates negative consequences for the environment. For this reason, the electrical equipment is marked with the symbol shown here.

This product is CE marked in accordance with EMC Directive 2014/30/EU and RoHS Directive 2011/65/EU. FIXED.zone a.s. hereby declares that this product complies with the essential requirements and other relevant provisions of the EMC 2014/30/EU and RoHS 2011/65/EU Directives.

FIXED.zone a.s.
Kubatova 6
České Budějovice, 37004
Czech Republic